U190C

No.	Description
1	Cabin parts
2	Dust vibrating parts
3	Machine head parts
4	Side brush parts
5	Main brush parts
6	Chassis parts
7	Garbage bin parts

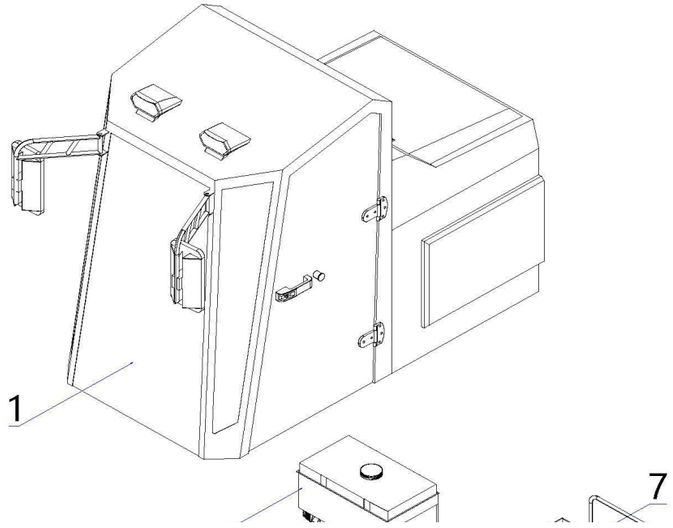

Accessory

1.The digital notification form is optimized. The original dig
not universal and can be used randomly.

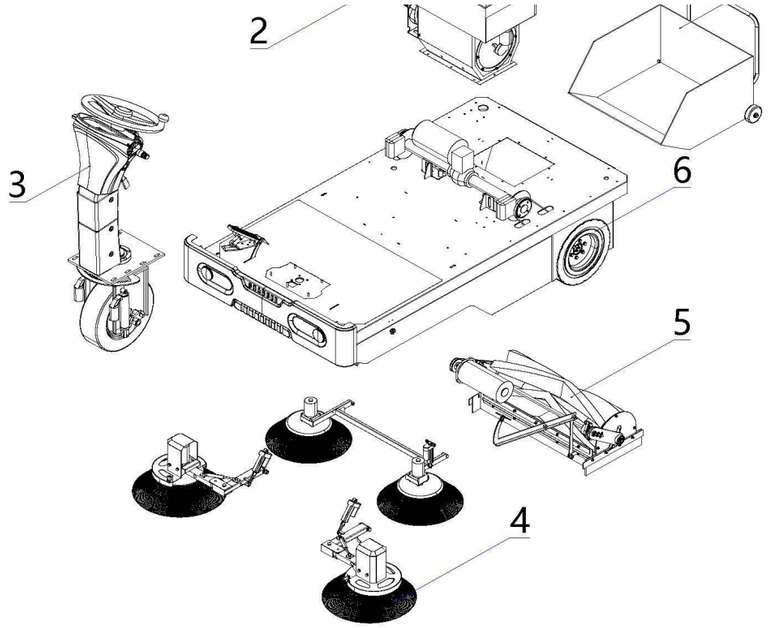

1.Cabin parts

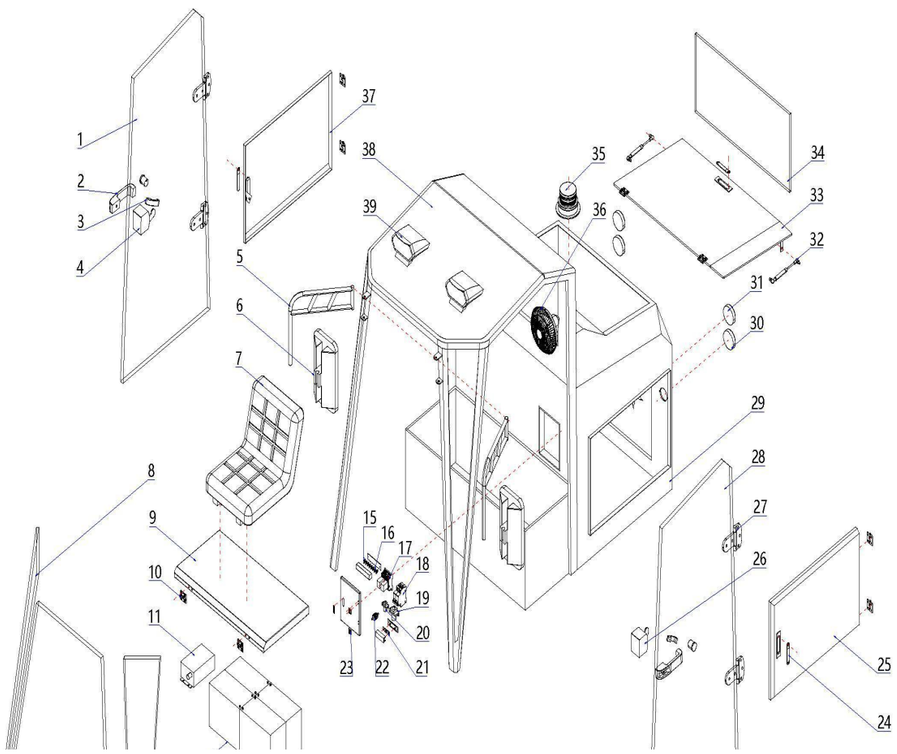

No.	Code	名称	Description
1	S43Z0-89031	右车门玻璃	Right door glass
2	S63A0-89001	门锁把手	Door lock handle
3	S63A0-89021	门内把手	Door handle
4	S63A0-89131	门锁锁芯	Door lock cylinder
5	S63A0-82001	后视镜支架【双杆】	Rearview mirror bracket [double pole]
6	S61A0-89021	后视镜	Rearview mirror
7	S50A0-19011	座椅	Seat
8	S43Z0-89061	右侧面中部装饰玻璃	Decorative glass in the middle of the right side
9	S43Z0-12011	电池箱上盖	Battery box upper cover
10	S50A0-19031	50*50mm铰链	50*50mm hinge
11	S63A1-03001	48V15A【车载】免维护充电器	48V15A [car] maintenance-free charger
12	X01Z0-92021	电池	Battery
13	S43Z0-89051	左侧面中部装饰玻璃	Decorative glass in the middle of the left side
14	S43Z0-89071	前挡风玻璃	Front windshield
15	S22A1-06011	5A保险丝	5A fuse
16	S24A1-06071	10A保险丝	10A fuse
17	S50A1-05141	八爪继电器	Octopus relay
18	S63A1-05071	断路保护器	circuit breaker
19	S40A1-05011	200D接触器	200D contactor
20	S24A1-05031	100D接触器	100D contactor
21	S50A1-06101	保险丝	Fuse
22	S50A1-06001	负极绝缘阻	Negative insulation resistance
23	S50A0-19001	40*40mm铰链	40*40mm hinge
24	S90A0-19011	机械箱侧门锁【不带钥匙】	Mechanical box side door lock [without key]
25	S43Z0-12021	左机械箱侧门	Left mechanical box side door
26	S63A0-89011	门锁锁芯	Door lock cylinder
27	S63A0-89031	车门合页	Door hinge
28	S43Z0-89021	左车门玻璃	Left door glass
29	S43Z0-02001	整车后箱体总成	Vehicle rear box assembly

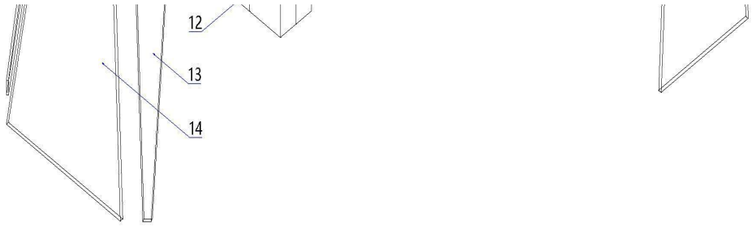

30	S63A1-05061	红色圆形尾灯	Red round tail light
31	S63A1-05051	黄色圆形尾灯	Yellow round tail light
32	S45A0-09001	摇臂弹簧	Rocker spring
33	S43Z0-09091	机械箱上盖板	Mechanical box upper cover
34	S43Z0-89041	后视玻璃窗	Rearview window
35	S50A1-05131	警示灯	Warning Light
36	S63A0-09001	电风扇	Electric fan
37	S43Z0-12031	右机械箱侧门	Right mechanical box side door
38	S43Z0-02011	整车驾驶室	Vehicle cab
39	S61A1-05051	顶灯	Dome light

2.Dust vibrating parts

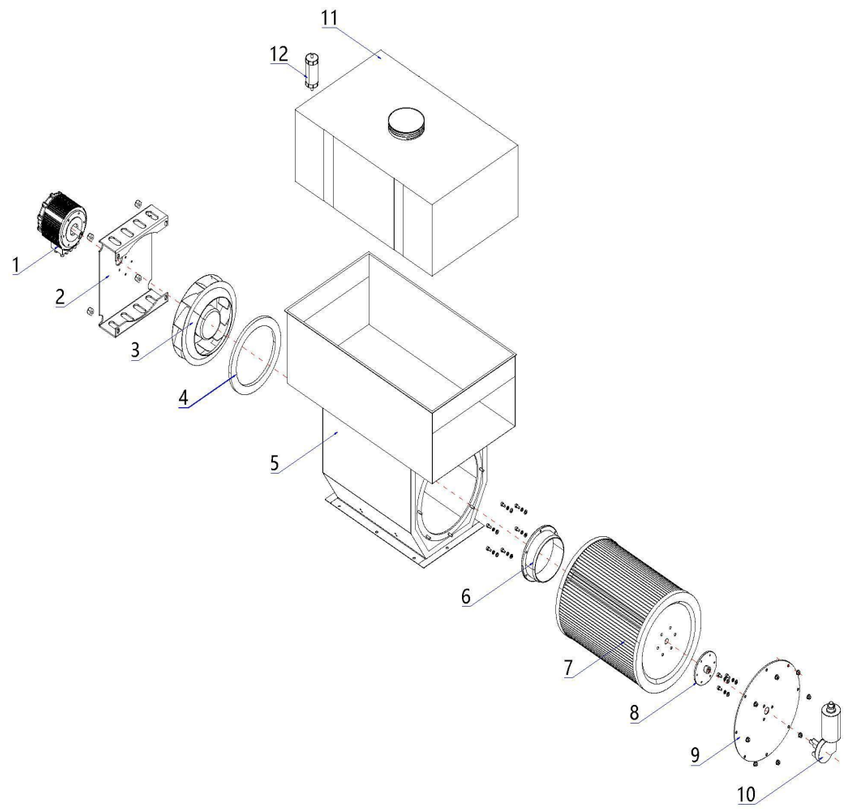

No.	Code	名称	Description
1	S63A1-02031	500W风机电机【有刷】	500W fan motor [with brush]
2	S63A0-92001	风机支架	Fan bracket
3	S50A0-92021	风机扇叶	Fan blades
4	S24A0-09211	密封圈	Sealing ring
5	S43Z0-92011	振尘箱	Vibrating dust box
6	SA490-09001	出风口	Air outlet
7	S61A0-99001	滤芯【350*415】	Filter element【350*415】
8	S50A0-92031	振尘法兰	Vibrating dust flange
9	S43Z0-92001	振尘电机面板	Vibrating dust motor panel
10	S63A1-02041	50W【大】振尘电机	50W [Large] Dust Vibrating Motor
11	S63A0-23001	水箱	Water tank
12	S50A0-09031	清水过滤器	Water filter

3.Machine head parts

No.	Code	名称	Description
1	S50A0-69021	方向盘	Steering wheel
2	S50A1-06051	大灯按键开关	Headlight key switch
3	S50A1-06061	洒水按键开关	Sprinkler key switch

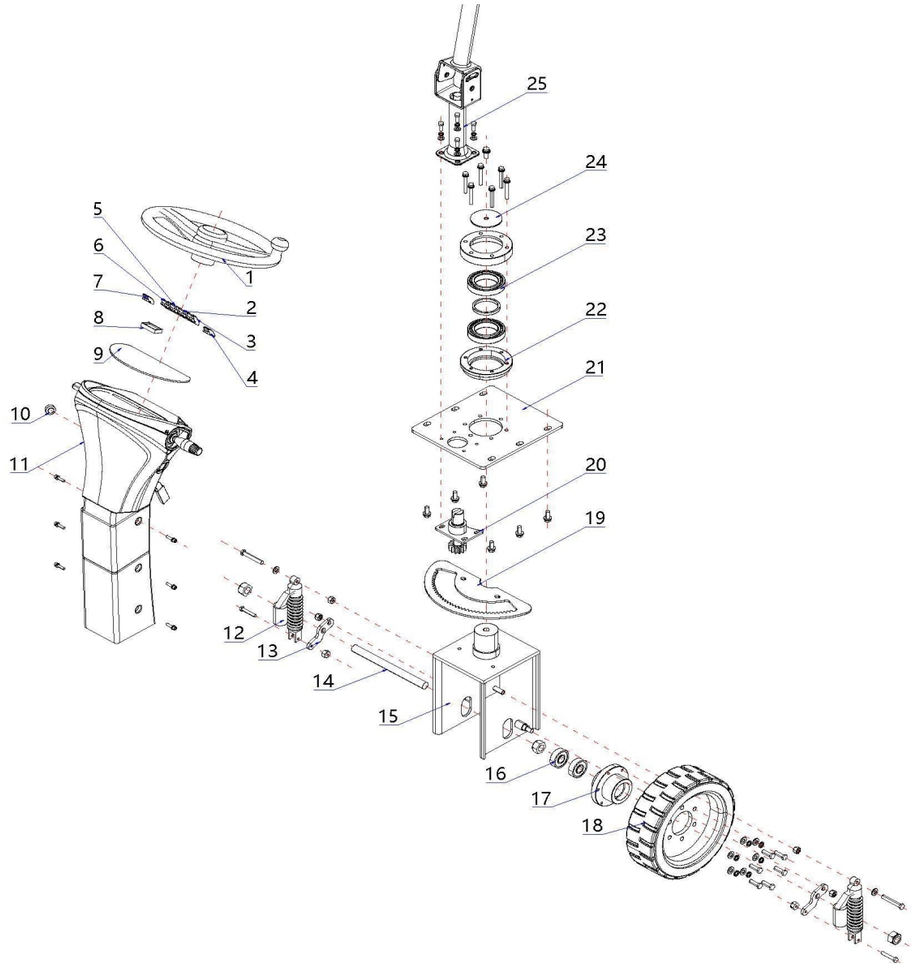

4	S50A1-06041	喇叭按键开关	Speaker key switch
5	S50A1-06031	振尘按键开关	Vibrating dust key switch
6	S50A1-06021	扫地按键开关	Sweeping button switch
7	S50A1-06011	进退按键开关	Forward and backward button switch
8	S50A1-05011	数字电量表	Digital energy meter
8	S77A0-09061	数字电量表（新款）	Digital electricity meter (new model)
9	SA730-69001	仪表盘面板	Dashboard panel
10	S61A1-05011	钥匙开关总成【小】	Key switch assembly [small]
11	S61A0-82031	方向立柱外壳	Directional column housing
12	S50A0-69011	前轮减震	Front wheel shock absorption
13	S50A0-62021	减震板	Shock absorbing board
14	S50A0-62011	前轮轴【含衬套、垫片、螺丝】	Front axle [including bushings, gaskets, screws]
15	S63A0-62011	前叉	Front fork
16	6204RS-00001	深沟球轴承	Deep groove ball bearings
17	S50A0-62001	前轮轮毂	Front wheel hub
18	S50A0-69001	实心轮胎【300*100】	Solid tire【300*100】
19	S50A0-62071	方向牙盘	Steering wheel
20	SA730-62001	方向小齿总成	Directional pinion assembly
21	S63A0-62001	前叉方板	Front fork square plate
22	S50A0-62051	方向大轴承套	Directional large bearing sleeve
23	60120-00001	6012轴承	6012 bearing
24	S50A0-62061	方向固定盖	Orientation fixed cover
25	S61A0-62031	方向管柱	Steering column

4. Side brush parts

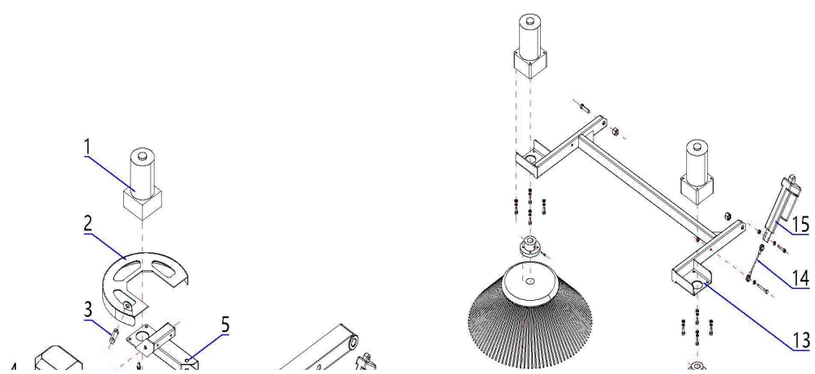

No.	Code	名称	Description
1	S50A1-02041	90W边刷电机	90W side brush motor
2	S44Z0-42041	**右边刷防撞支架**	Right brush anti-collision bracket
3	SA730-09021	喷头总成	Nozzle assembly
4	S44Z0-42031	**边刷罩**	Side brush cover
5	S63A0-62061	右前边刷座	Right front brush seat
6	S43Z0-42011	右前边刷摇臂	Brush the rocker arm on the right front

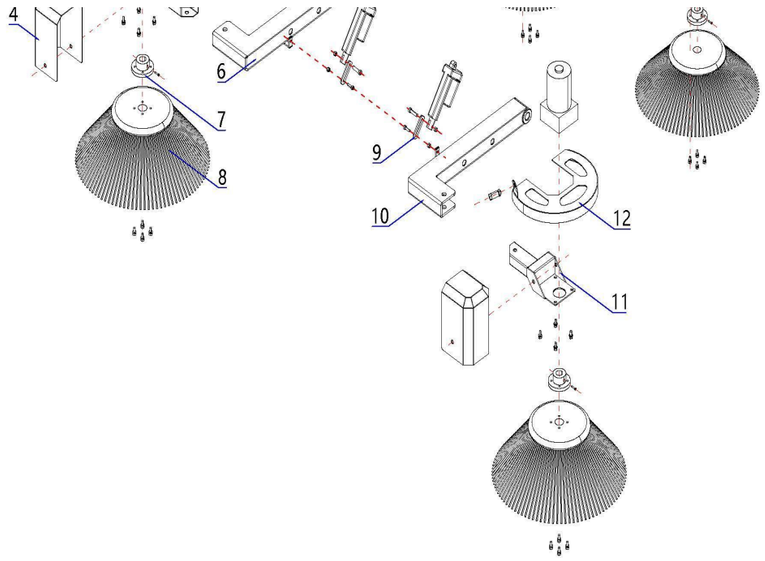

7	S50A0-42001	边刷法兰	Side brush flange
8	S50A0-49001	260边刷	260 side brush
9	S50A0-42061	推杆电机铁片	Push rod motor iron sheet
10	S43Z0-42001	左前边刷摇臂	Brush the left front rocker arm
11	S63A0-62041	左前边刷座	Left front brush holder
12	S44Z0-42051	**左边刷防撞支架**	Brush anti-collision bracket on the left
13	S63A0-62051	中边刷支架	Middle side brush holder
14	S50A0-49011	钢丝拉绳	Wire rope
15	S50A1-02051	170mm主刷边刷升降推杆电机	70mm main brush side brush lift push rod moto

5.Main brush parts

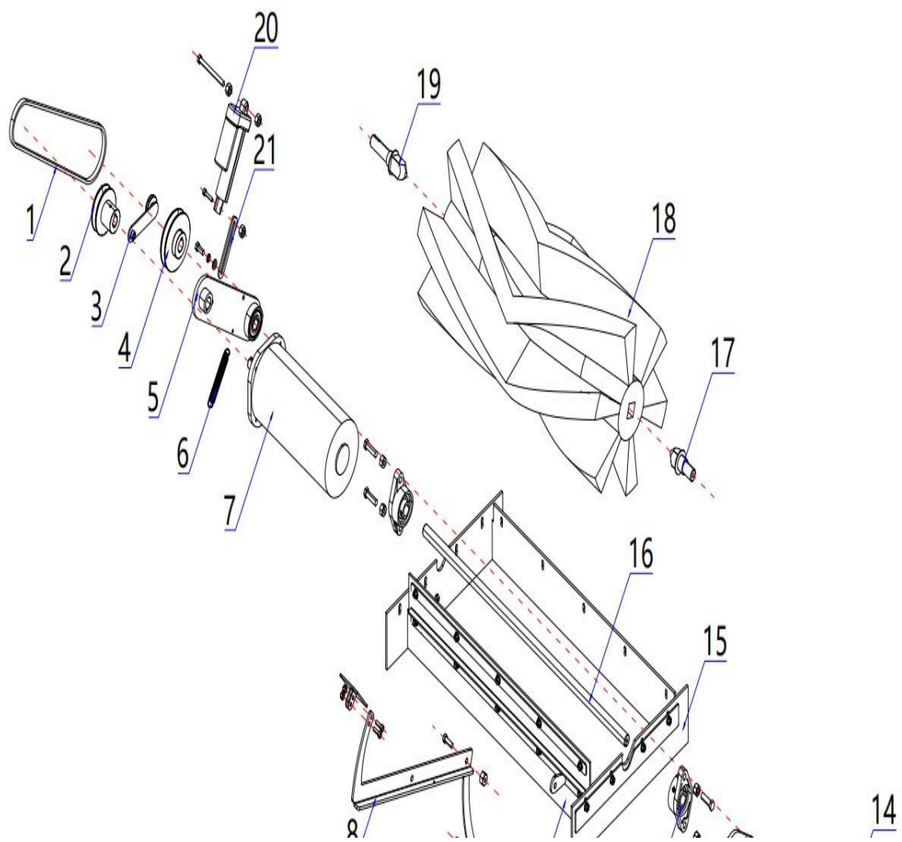

No.	Code	名称	Description
1	S50A0-39011	889主刷皮带	889 main brush belt
2	S50A0-32081	主刷皮带轮【电机端】	Main brush pulley [motor end]
3	SA730-32001	主刷皮带张紧轮总成	Main brush belt tensioner assembly
4	S50A0-32091	主刷皮带轮【主刷端】	Main brush pulley [main brush end]
5	SA730-42071	右主刷摇臂一套	Right main brush rocker arm set
6	S50A0-39021	主刷复位弹簧	Main brush return spring
7	S50A1-02031	800W主刷电机【有刷】	800W main brush motor [with brush]
8	S43Z0-92031	挡皮踏板支架总成	Leather baffle pedal bracket assembly
9	S4A10-96001	前后挡皮	Front and rear baffles
10	S50A0-32011	主刷同步轴带座轴承	Main brush synchronization shaft seated bearing
11	S50A0-32021	左主刷摇臂【短】	Left main brush rocker arm [short]
12	S50A0-32031	左主刷摇臂【长】	Left main brush rocker arm [long]
13	S24A0-32071	主刷盖板	Main brush cover
14	S50A0-32041	“L”型螺杆	"L" type screw
15	S4A10-96011	左右挡皮	Left and right skin protection
16	S50A0-32001	主刷同步轴	Main brush synchronization shaft

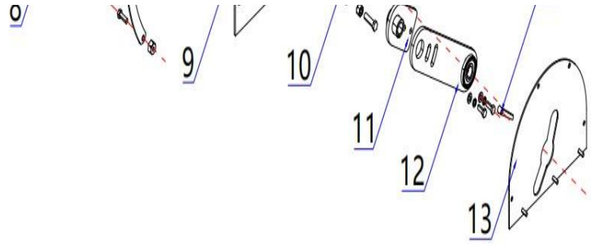

17	S50A0-32071	主刷方头轴【短】	Main brush square head shaft [short]
18	S50A0-39001	700主刷	700 main brush
19	S50A0-32061	主刷方头轴【长】	Main brush square head shaft [long]
20	S50A1-02051	170mm主刷边刷升降推杆电机	70mm main brush side brush lift push rod moto
21	S50A0-42061	推杆电机铁片	Push rod motor iron sheet

6.Chassis parts

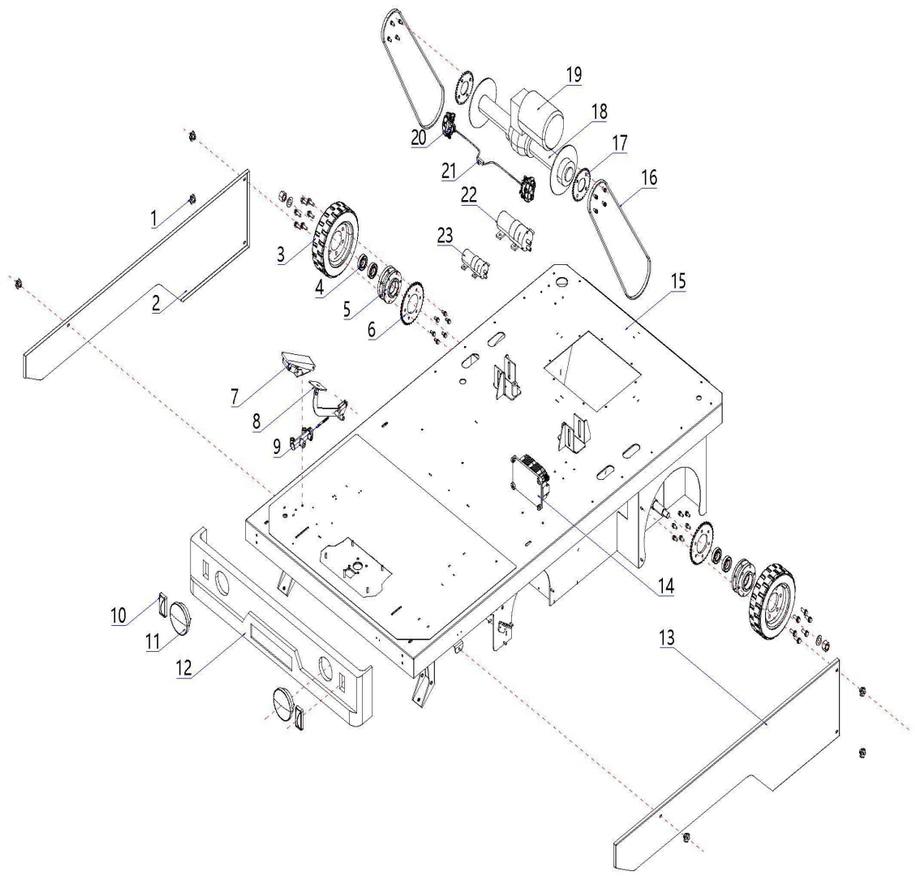

No.	Code	名称	Description
1	S24A0-09101	侧板梅花旋钮	Side panel plum blossom knob
2	S43Z0-12051	右主刷护板	Right main brush guard
3	S50A0-59001	实心轮胎【350*100】	Solid tire【350*100】
4	60060-00001	6006轴承	6006 bearing
5	S50A0-52001	后轮轮毂	Rear wheel hub
6	S50A0-52011	后轮齿轮	Rear wheel gear
7	S50A1-05091	加速踏板	Acceleration pedal
8	S63A0-52011	刹车踏板支架总成	Brake pedal bracket assembly
9	S50A0-52041	刹车顶针	Brake thimble
10	S61A1-05071	前转向灯	Front turn signal
11	S61A1-05061	前大灯	Headlight
12	S43Z0-17001	保险杠【吸塑】	Bumper [Vacuum forming]
13	S43Z0-12041	左主刷护板	Left main brush guard
14	S50A1-04021	1200W银色驱动控制器	1200W silver driver controller
15	S43Z0-12001	整车底盘	Vehicle chassis
16	S50A0-59021	驱动链条	Drive chain
17	S81A0-52001	后桥牙盘	Rear axle chainring
18	S50A1-05051	铭尊款驱动桥	Mingzun model drive axle
19	S50A1-02001	1200W驱动电机【铭尊款】	1200W drive motor [Mingzun model]
20	S50A0-59061	腾锐、铭尊款刹车分泵	Tengrui and Mingzun brake cylinders
21	S50A0-59041	腾锐、铭尊款刹车总泵	rake master cylinder for Tengrui and Mingzun mode
22	S43Z1-02001	120W水泵电机	120W water pump motor
23	S50A1-05101	36W水泵电机	36W water pump motor
23	S83A0-09131	36W银色标签水泵电机	36W silver label water pump motor

7.Garbage bin parts

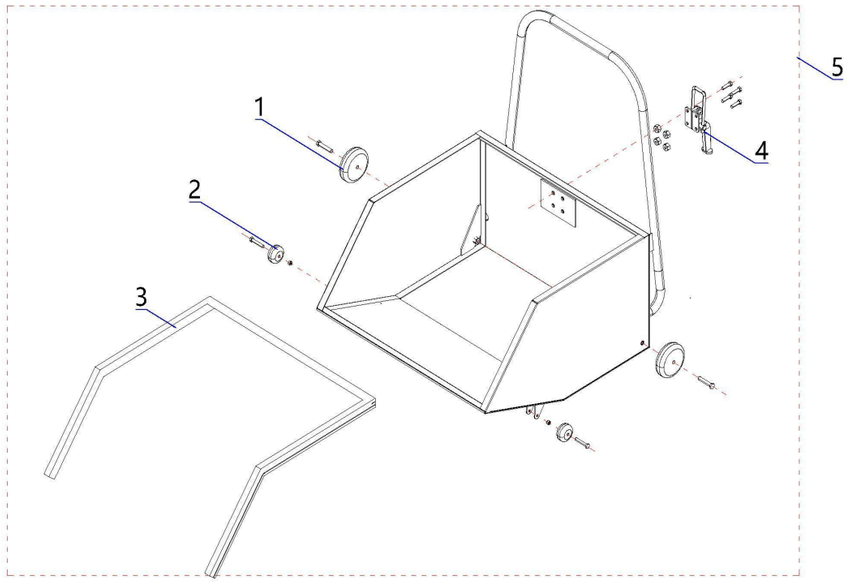

No.	Code	名称	Description
1	S50A0-79021	垃圾箱大轮	Big wheel of garbage bin
2	S50A0-79011	垃圾箱小轮	Small wheel of garbage bin
3	S50A0-79001	3米垃圾箱密封条	3m sealing strip of garbage bin
4	S50A0-79031	垃圾箱挂钩	Garbage bin hook
5	S43Z0-72001	垃圾箱总成	Garbage Bin assembly

Update Record

ital notification form and the new digital notification form are

Specification	Quantity	Start time	Stop time
U190C	1		
For Weishijie S10,S11,S12,S13,S14,S15,S16,S18-T,S18-F,CAR180,CAR200,U190C,	2		
	2		
	1		
Weishijie S10 new/S11 new/S12 new,S15/16/17,S18-T,S18-F,U190C,U200C	2		
	2		
	1		
U190C	1		
U190C	1		
	8		
YZ-S10，RS-CAR180	1		
Tianneng maintenance-free 6-EVF-100，,12V100A	4		
U190C	1		
U190C	1		
5A fuse（S3,S4,GS1,S5,S6,S8,S9,S10,S11,S12,S13,S14,S15）	3		
10A fuse（S4,GS1,S5,S6,S8,S10,S11,S12,S13,S14,S15）	5		
Octopus relay (common to all Weishijie series)	2		
250V20A	2		
	1		
100D contactor	1		
100A	1		
	1		
	2		
	1		
	2		
	2		
	2		
U190C	1		
U190C	1		

	2		
	2		
Rocker spring（Applicable to the entire range of Westgate）	1		
	1		
U190C	1		
	1		
	1		
U190C	1		
U190C	1		
	2		

Specification	Quantity	Start time	Stop time
500W	1		
	1		
	1		
For S4	1		
U190C	1		
System-wide	1		
350*415	1		
	1		
U190C	1		
50W（big）	1		
	1		
System-wide	1		

Specification	Quantity	Start time	Stop time
	1		
Universal	1		
Universal	1		

Universal	1		
Vibrating dust key switch（Applicable to Weishijie S8,S9,S10,S11,S12,S13,S14,S15, S16）	1		
Universal	1		
Universal	1		
Figure	1		
	1	12/1/2023	
	1		
	1		
	1		
	2		
	2		
	2		
	1		
6204-2RS	2		
	1		
300	1		
	1		
	1		
	1		
	2		
For S4,GS1,S5,S6,S8,S9,S10,S11,S12,S13,S15,DS1450X,S18-T,CAR180,CAR200, U190C,U200C	2		
	1		
	1		

Specification	Quan tity	Start time	Stop time
90W	4		
	1		
Nozzle assembly（S4,GS1,S6,S8,S9,S10,S11,S12,S13,S14,S15）	2		
	2		
S10、U190C	1		
U190C	1		

	4		
260	4		
	4		
U190C	1		
S10、U190C	1		
	1		
	1		
	1		
170mm	1		

Specification	Quantity	Start time	Stop time
	1		
	1		
Universal	1		
	1		
Right main brush rocker arm set（For WeishijieS5,S6,S8,S9,S10,S11,S12,S13,S15,S16）	1		
S8、S9、S10、S11、S12、S13、S14、S15、S16、DS1450X、S18-T、S18-F、CAR180、CAR200、U190C、U200C	1		
800W	1		
U190C	1		
	1		
;	2		
	1		
	1		
Main brush cover（S4,GS1,S5,S6,S8,S9,S10,S11,S12,S13,S14,S15）	1		
	1		
	1		
760	1		

	1		
700MM	1		
	1		
170mm	1		
	1		

Specification	Quantity	Start time	Stop time
Side panel plum blossom knob（S4,S5,S6,S8,S9,S10,S11,S12,S13,S15）	6		
U190C	1		
	2		
6006 bearing	4		
Universal	2		
	2		
	1		
S10、CAR180、U190C	1		
	1		
	2		
	2		
Vacuum forming	1		
U190C	1		
1200W Silver walking controller	1		
U190C	1		
	2		
	2		
	1		
	1		
	1		
ls	1		
	1		
36W	1		12/1/2023
36W	1	12/1/2023	

Specification	Quan tity	Start time	Stop time
Universal	2		
Universal	2		
	1		
Universal	1		
U190C	1		